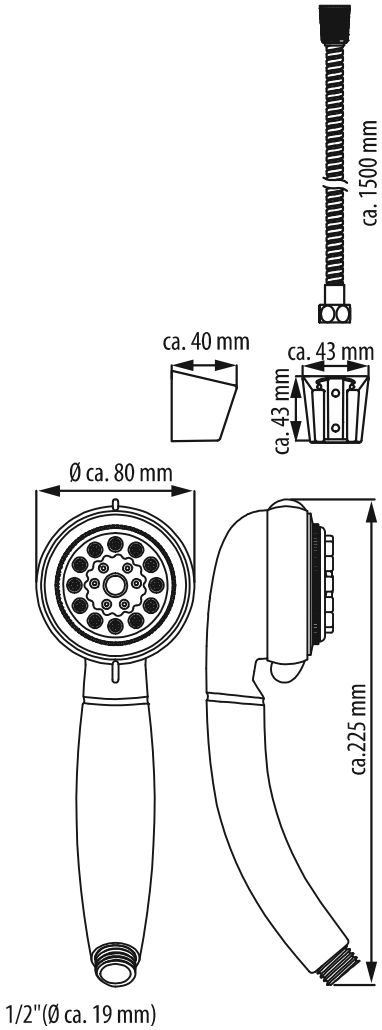
ca. 1500 mm
ca. 40 mm
ca. 43 mm
ca. 43 mm
Ø ca. 80 mm
ca.225 mm
1/2"(Ø ca. 19 mm)